T-8809A

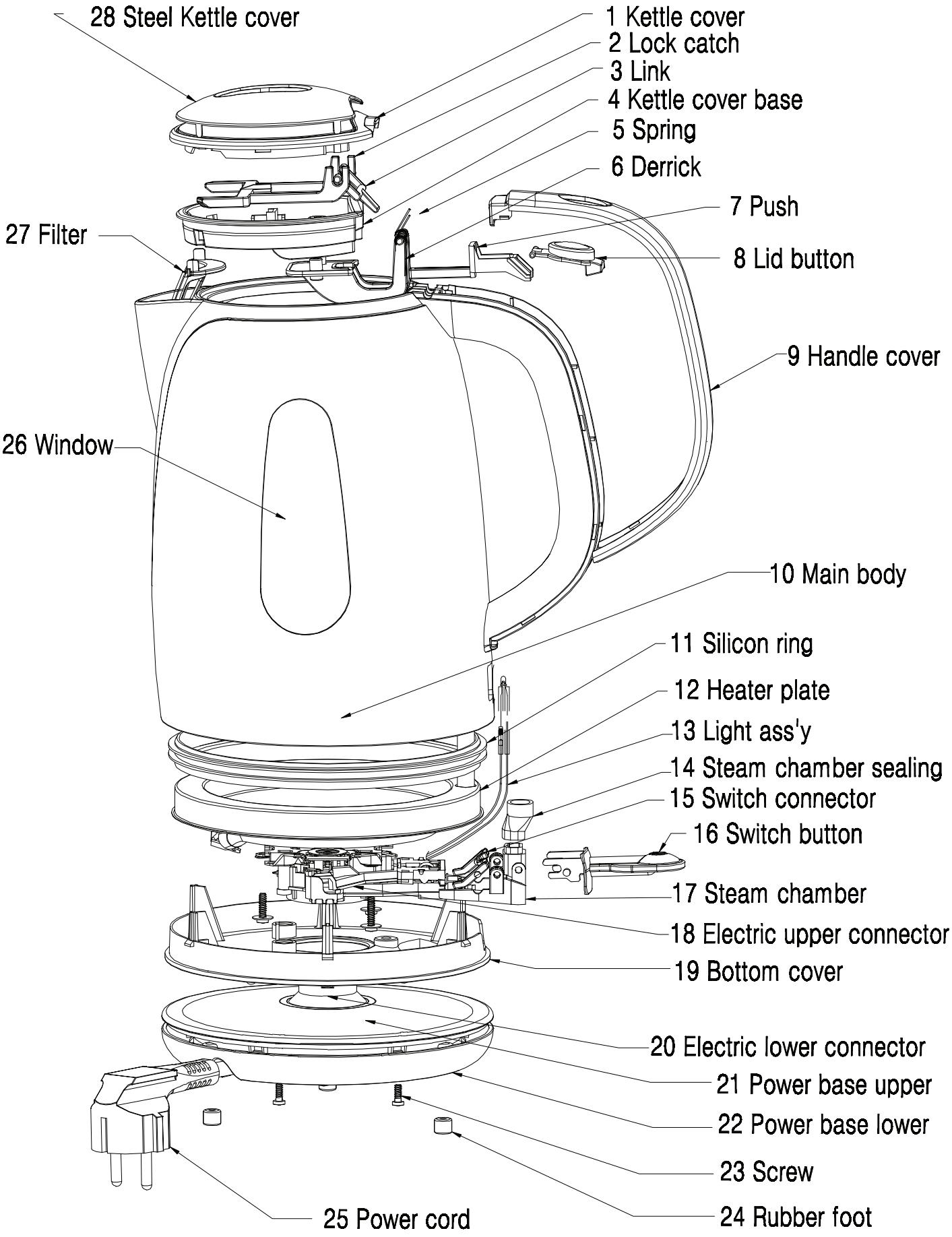
28 Steel Kettle cover
1 Kettle cover
2 Lock catch
3 Link
4 Kettle cover base
5 Spring
6 Derrick
7 Push
27 Filter
8 Lid button
9 Handle cover
26 Window
10 Main body
11 Silicon ring
12 Heater plate
13 Light ass'y
14 Steam chamber sealing
15 Switch connector
16 Switch button
17 Steam chamber
18 Electric upper connector
19 Bottom cover
20 Electric lower connector
21 Power base upper
22 Power base lower
23 Screw
24 Rubber foot
25 Power cord